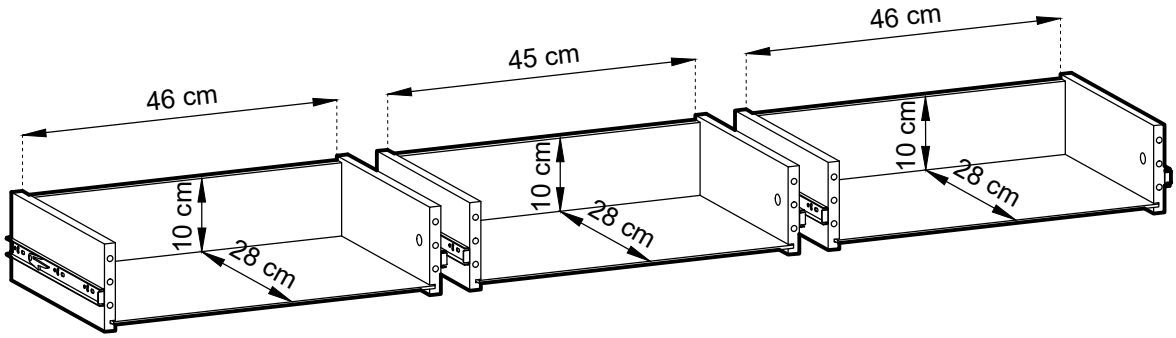
46 cm
45 cm
46 cm
10 cm
28 cm
10 cm
28 cm
10 cm
28 cm

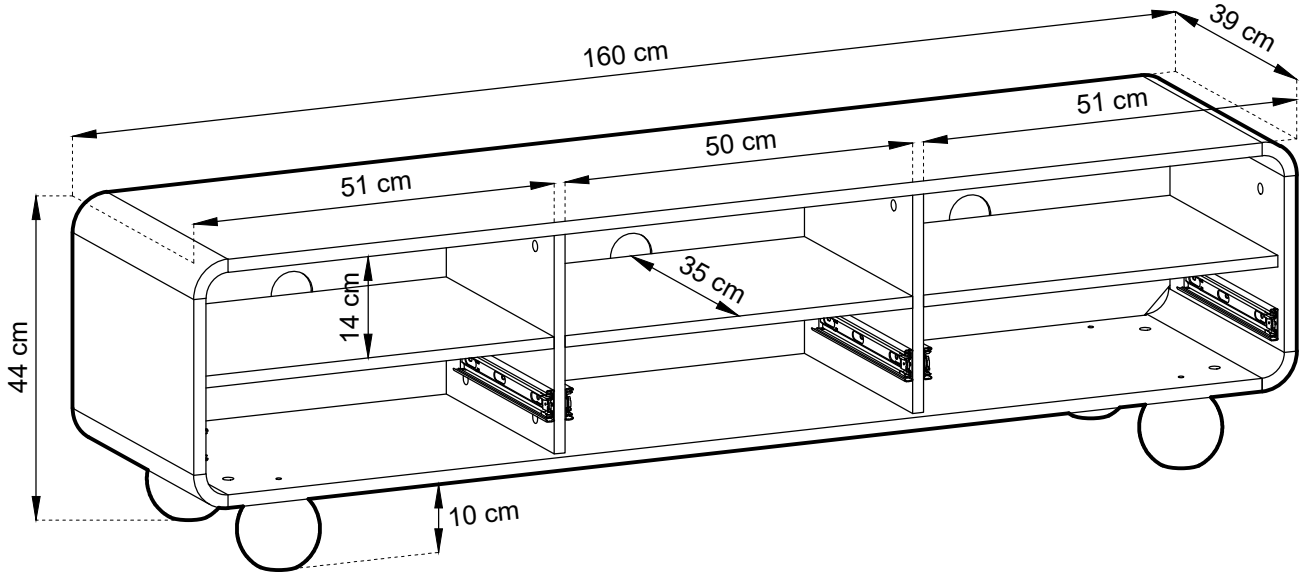
160 cm
39 cm
51 cm
50 cm
51 cm
35 cm
14 cm
44 cm
10 cm